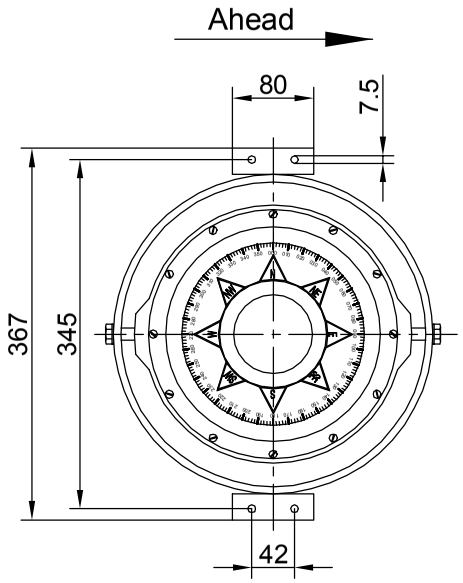


Drilling Scheme

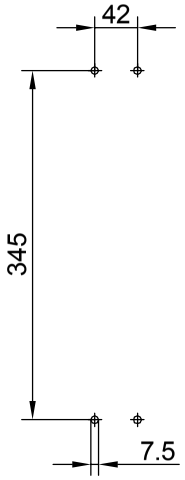


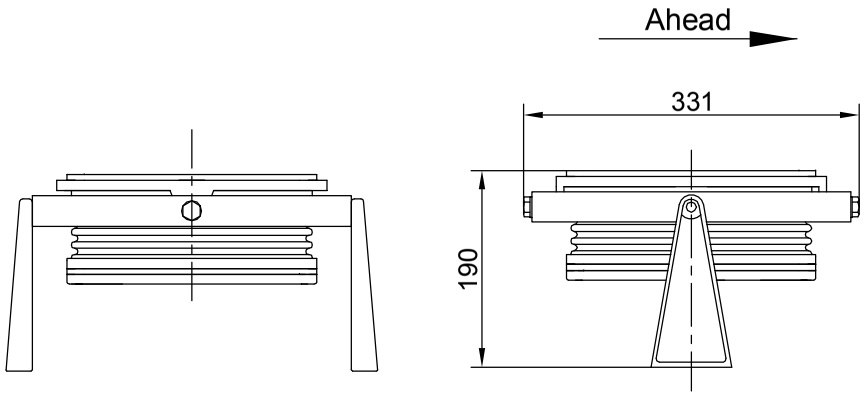


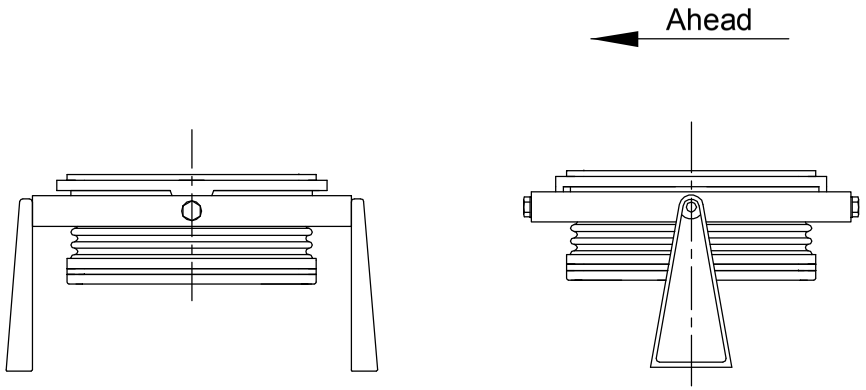


Weight app: ca. 11.5kg
Operational temperatur: -30/+60
Protection: IP67

| | | | | | | | |
|---|---|---|---|---|---|---|---|
| | | | | alle Maße ohne Toleranzangabe ±0.2 | | Werkstück -kanten DIN 6784 | Maßstab |
| | | | | | Datum | Name | Desk Compass 180 Typ/11 Direct Reading Athwardship Mounting |
| | | | | Bearb. | 15.07.13 | Dörfert | |
| | | | | Gepr. | | | |
| | | | | Norm. | | | |
| | | | | Cassens & Plath GmbH Bremerhaven | | | Blatt |
| Zust. | Änderung | Datum | Name | | | | |